310D Specifications

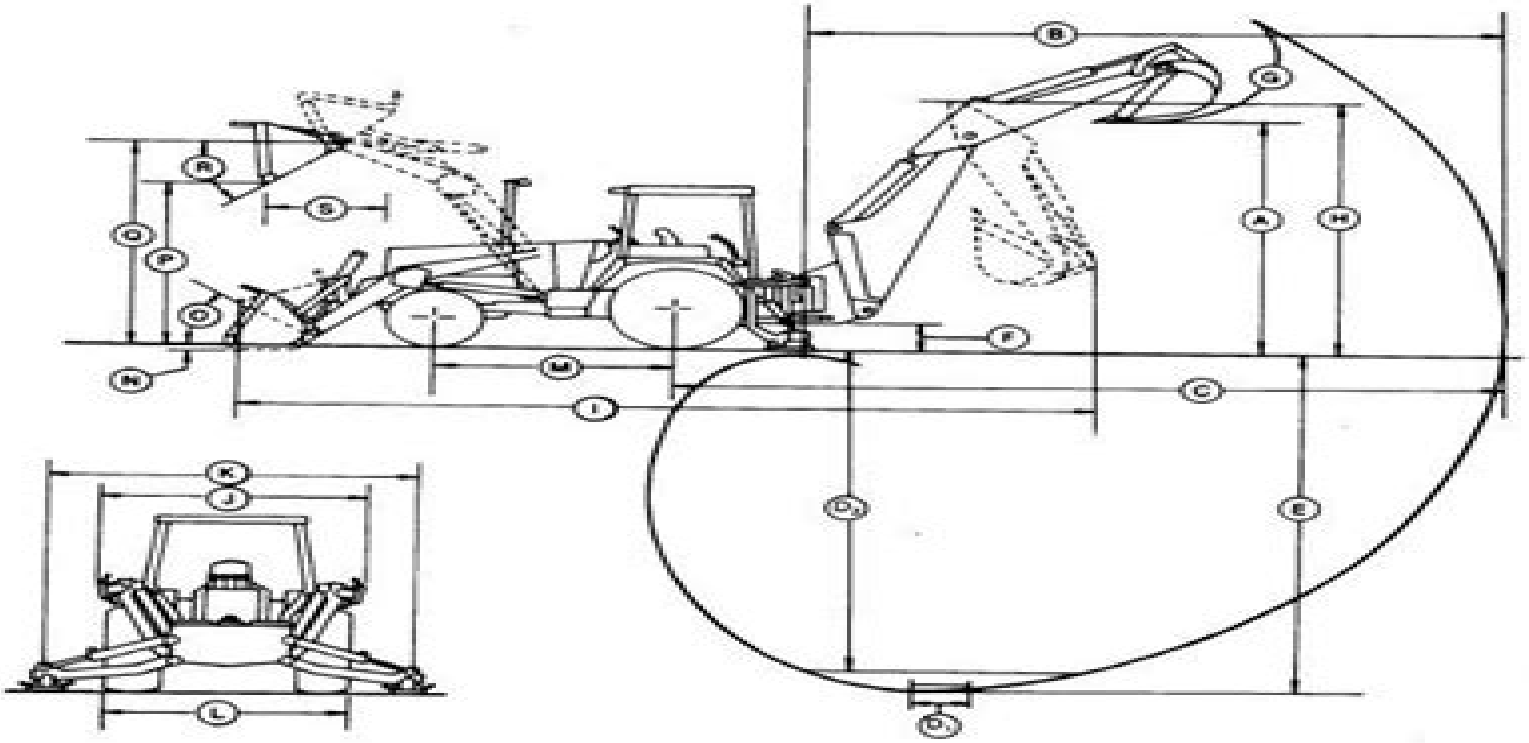

NOTE: Specifications and design subject to change without notice. Wherever applicable, specifications are in accordance with SAE Standards. Except where otherwise noted, these specifications are based on a standard machine with 17.5L-24, 10PR, R4 rear tires; 11L-15, 8PR, F3 front tires with 75 percent $CaCl_2$ fill; 0.76 m^3 (1.0 cu. yd.) loader bucket; 610 mm (24 in.) backhoe bucket; ROPS/FOPS; full fuel tank and 79 kg (175 lb) operator.

www.epcatalogs.com

John Deere 310 Backhoe Shop Manual

Annelies Wilder-Smith

John Deere 310 Backhoe Shop Manual:

Decoding **John Deere 310 Backhoe Shop Manual**: Revealing the Captivating Potential of Verbal Expression

In a time characterized by interconnectedness and an insatiable thirst for knowledge, the captivating potential of verbal expression has emerged as a formidable force. Its capability to evoke sentiments, stimulate introspection, and incite profound transformations is genuinely awe-inspiring. Within the pages of "**John Deere 310 Backhoe Shop Manual**," a mesmerizing literary creation penned by a celebrated wordsmith, readers attempt an enlightening odyssey, unraveling the intricate significance of language and its enduring effect on our lives. In this appraisal, we shall explore the book is central themes, evaluate its distinctive writing style, and gauge its pervasive influence on the hearts and minds of its readership.

https://recruitmentslovakia.com/public/detail/default.aspx/chemistry%20tests%20year%201.pdf

Table of Contents John Deere 310 Backhoe Shop Manual

1. Understanding the eBook John Deere 310 Backhoe Shop Manual
    - The Rise of Digital Reading John Deere 310 Backhoe Shop Manual
    - Advantages of eBooks Over Traditional Books
2. Identifying John Deere 310 Backhoe Shop Manual
    - Exploring Different Genres
    - Considering Fiction vs. Non-Fiction
    - Determining Your Reading Goals
3. Choosing the Right eBook Platform
    - Popular eBook Platforms
    - Features to Look for in an John Deere 310 Backhoe Shop Manual
    - User-Friendly Interface
4. Exploring eBook Recommendations from John Deere 310 Backhoe Shop Manual
    - Personalized Recommendations
    - John Deere 310 Backhoe Shop Manual User Reviews and Ratings
    - John Deere 310 Backhoe Shop Manual and Bestseller Lists

5. Accessing John Deere 310 Backhoe Shop Manual Free and Paid eBooks
    - John Deere 310 Backhoe Shop Manual Public Domain eBooks
    - John Deere 310 Backhoe Shop Manual eBook Subscription Services
    - John Deere 310 Backhoe Shop Manual Budget-Friendly Options
6. Navigating John Deere 310 Backhoe Shop Manual eBook Formats
    - ePub, PDF, MOBI, and More
    - John Deere 310 Backhoe Shop Manual Compatibility with Devices
    - John Deere 310 Backhoe Shop Manual Enhanced eBook Features
7. Enhancing Your Reading Experience
    - Adjustable Fonts and Text Sizes of John Deere 310 Backhoe Shop Manual
    - Highlighting and Note-Taking John Deere 310 Backhoe Shop Manual
    - Interactive Elements John Deere 310 Backhoe Shop Manual
8. Staying Engaged with John Deere 310 Backhoe Shop Manual
    - Joining Online Reading Communities
    - Participating in Virtual Book Clubs
    - Following Authors and Publishers John Deere 310 Backhoe Shop Manual
9. Balancing eBooks and Physical Books John Deere 310 Backhoe Shop Manual
    - Benefits of a Digital Library
    - Creating a Diverse Reading Collection John Deere 310 Backhoe Shop Manual
10. Overcoming Reading Challenges
    - Dealing with Digital Eye Strain
    - Minimizing Distractions
    - Managing Screen Time
11. Cultivating a Reading Routine John Deere 310 Backhoe Shop Manual
    - Setting Reading Goals John Deere 310 Backhoe Shop Manual
    - Carving Out Dedicated Reading Time
12. Sourcing Reliable Information of John Deere 310 Backhoe Shop Manual
    - Fact-Checking eBook Content of John Deere 310 Backhoe Shop Manual
    - Distinguishing Credible Sources
13. Promoting Lifelong Learning

    - Utilizing eBooks for Skill Development
    - Exploring Educational eBooks
14. Embracing eBook Trends
    - Integration of Multimedia Elements
    - Interactive and Gamified eBooks

John Deere 310 Backhoe Shop Manual Introduction

Free PDF Books and Manuals for Download: Unlocking Knowledge at Your Fingertips In todays fast-paced digital age, obtaining valuable knowledge has become easier than ever. Thanks to the internet, a vast array of books and manuals are now available for free download in PDF format. Whether you are a student, professional, or simply an avid reader, this treasure trove of downloadable resources offers a wealth of information, conveniently accessible anytime, anywhere. The advent of online libraries and platforms dedicated to sharing knowledge has revolutionized the way we consume information. No longer confined to physical libraries or bookstores, readers can now access an extensive collection of digital books and manuals with just a few clicks. These resources, available in PDF, Microsoft Word, and PowerPoint formats, cater to a wide range of interests, including literature, technology, science, history, and much more. One notable platform where you can explore and download free John Deere 310 Backhoe Shop Manual PDF books and manuals is the internets largest free library. Hosted online, this catalog compiles a vast assortment of documents, making it a veritable goldmine of knowledge. With its easy-to-use website interface and customizable PDF generator, this platform offers a user-friendly experience, allowing individuals to effortlessly navigate and access the information they seek. The availability of free PDF books and manuals on this platform demonstrates its commitment to democratizing education and empowering individuals with the tools needed to succeed in their chosen fields. It allows anyone, regardless of their background or financial limitations, to expand their horizons and gain insights from experts in various disciplines. One of the most significant advantages of downloading PDF books and manuals lies in their portability. Unlike physical copies, digital books can be stored and carried on a single device, such as a tablet or smartphone, saving valuable space and weight. This convenience makes it possible for readers to have their entire library at their fingertips, whether they are commuting, traveling, or simply enjoying a lazy afternoon at home. Additionally, digital files are easily searchable, enabling readers to locate specific information within seconds. With a few keystrokes, users can search for keywords, topics, or phrases, making research and finding relevant information a breeze. This efficiency saves time and effort, streamlining the learning process and allowing individuals to focus on extracting the information they need. Furthermore, the availability of free PDF books and manuals fosters a culture of continuous learning. By removing financial barriers, more people can access educational resources and pursue lifelong

learning, contributing to personal growth and professional development. This democratization of knowledge promotes intellectual curiosity and empowers individuals to become lifelong learners, promoting progress and innovation in various fields. It is worth noting that while accessing free John Deere 310 Backhoe Shop Manual PDF books and manuals is convenient and cost-effective, it is vital to respect copyright laws and intellectual property rights. Platforms offering free downloads often operate within legal boundaries, ensuring that the materials they provide are either in the public domain or authorized for distribution. By adhering to copyright laws, users can enjoy the benefits of free access to knowledge while supporting the authors and publishers who make these resources available. In conclusion, the availability of John Deere 310 Backhoe Shop Manual free PDF books and manuals for download has revolutionized the way we access and consume knowledge. With just a few clicks, individuals can explore a vast collection of resources across different disciplines, all free of charge. This accessibility empowers individuals to become lifelong learners, contributing to personal growth, professional development, and the advancement of society as a whole. So why not unlock a world of knowledge today? Start exploring the vast sea of free PDF books and manuals waiting to be discovered right at your fingertips.

FAQs About John Deere 310 Backhoe Shop Manual Books

How do I know which eBook platform is the best for me? Finding the best eBook platform depends on your reading preferences and device compatibility. Research different platforms, read user reviews, and explore their features before making a choice. Are free eBooks of good quality? Yes, many reputable platforms offer high-quality free eBooks, including classics and public domain works. However, make sure to verify the source to ensure the eBook credibility. Can I read eBooks without an eReader? Absolutely! Most eBook platforms offer webbased readers or mobile apps that allow you to read eBooks on your computer, tablet, or smartphone. How do I avoid digital eye strain while reading eBooks? To prevent digital eye strain, take regular breaks, adjust the font size and background color, and ensure proper lighting while reading eBooks. What the advantage of interactive eBooks? Interactive eBooks incorporate multimedia elements, quizzes, and activities, enhancing the reader engagement and providing a more immersive learning experience. John Deere 310 Backhoe Shop Manual is one of the best book in our library for free trial. We provide copy of John Deere 310 Backhoe Shop Manual in digital format, so the resources that you find are reliable. There are also many Ebooks of related with John Deere 310 Backhoe Shop Manual. Where to download John Deere 310 Backhoe Shop Manual online for free? Are you looking for John Deere 310 Backhoe Shop Manual PDF? This is definitely going to save you time and cash in something you should think about. If you trying to find then search around for online. Without a doubt there are numerous these available and many of them have the freedom. However without doubt you receive whatever you purchase. An alternate way to get ideas is always

to check another John Deere 310 Backhoe Shop Manual. This method for see exactly what may be included and adopt these ideas to your book. This site will almost certainly help you save time and effort, money and stress. If you are looking for free books then you really should consider finding to assist you try this. Several of John Deere 310 Backhoe Shop Manual are for sale to free while some are payable. If you arent sure if the books you would like to download works with for usage along with your computer, it is possible to download free trials. The free guides make it easy for someone to free access online library for download books to your device. You can get free download on free trial for lots of books categories. Our library is the biggest of these that have literally hundreds of thousands of different products categories represented. You will also see that there are specific sites catered to different product types or categories, brands or niches related with John Deere 310 Backhoe Shop Manual. So depending on what exactly you are searching, you will be able to choose e books to suit your own need. Need to access completely for Campbell Biology Seventh Edition book? Access Ebook without any digging. And by having access to our ebook online or by storing it on your computer, you have convenient answers with John Deere 310 Backhoe Shop Manual To get started finding John Deere 310 Backhoe Shop Manual, you are right to find our website which has a comprehensive collection of books online. Our library is the biggest of these that have literally hundreds of thousands of different products represented. You will also see that there are specific sites catered to different categories or niches related with John Deere 310 Backhoe Shop Manual So depending on what exactly you are searching, you will be able tochoose ebook to suit your own need. Thank you for reading John Deere 310 Backhoe Shop Manual. Maybe you have knowledge that, people have search numerous times for their favorite readings like this John Deere 310 Backhoe Shop Manual, but end up in harmful downloads. Rather than reading a good book with a cup of coffee in the afternoon, instead they juggled with some harmful bugs inside their laptop. John Deere 310 Backhoe Shop Manual is available in our book collection an online access to it is set as public so you can download it instantly. Our digital library spans in multiple locations, allowing you to get the most less latency time to download any of our books like this one. Merely said, John Deere 310 Backhoe Shop Manual is universally compatible with any devices to read.

Find John Deere 310 Backhoe Shop Manual :

chemistry tests year 10
civics end of course study guide
~~chemistry target publication digest 12 th part 1 st~~
chemistry skills and math workbook answer key
cloze paragraphs on friendship
~~chemistry test cumulative review answers~~

christian character object lesson
citroen c8 parts
classifying rocks lab key k12
chemistry regents answers 2015 june
clinical kinesiology and anatomy worsheet answers
~~classification of organisms test questions~~
civic education past papers zambia
club car parts diagram carryall
chemistry the mole study guide answers

John Deere 310 Backhoe Shop Manual :

connexions management des organisations 1re bac s copy - Oct 09 2022
web connexions management des organisations 1re bac s 1 connexions management des organisations 1re bac s this is likewise one of the factors by obtaining the soft documents of this connexions management des organisations 1re bac s by online you might not require more become old to spend to go to the ebook inauguration as with
connexions management des organisations 1re bac stmg by - Feb 01 2022
web description read download lire tlcharger connexions management des organisations 1re bac stmg g p ressources lyce assistance scolaire personnalise et achat management stmg pas cher ou d occasion rakuten connexions management des anisations 1re bac stmg livres scolaires d occasions pas chers connexions
free pdf download connexions management des organisations 1re bac s - Mar 14 2023
web connexions management des organisations 1re bac s environnement pro 1re bac pro agora dec 10 2022 prepabac 1re stmg bac 2022 toutes les matières cours et contrôle continu may 03 2022 un ouvrage de révision complet tout le cours en synthèses structuré et illustré d exemples concrets un
connexions management des organisations 1re bac s - Oct 21 2023
web les écoles de commerce et de management gwénolé guiomard 2023 03 11 présente l ensemble des filières de l enseignement commercial français ainsi que les moyens d intégrer une école de commerce au niveau bac prépa ou bac 2 avec de nombreuses informations pratiques les résultats de toutes les prépas pour toutes les écoles la
connexions management des organisations 1re bac s pdf - Jun 05 2022
web connexions management des organisations 1re bac s le management de l intelligence collective engaging researchers with data management the cookbook maneuver and firepower yearbook of international organizations 2014 2015 volume 4

annuaire téléphonique strengthening forensic science in the united states réseaux de relations

connexions management des organisations 1re bac s - Aug 07 2022

web connexions management des organisations 1re bac s yearbook of international organizations culture économique juridique et managériale cejm 1re et 2e années bts 2021 pochette élève

download solutions connexions management des organisations 1re bac s - Feb 13 2023

web connexions management des organisations 1re bac s communication et organisation 1ère bac pro secrétariat apr 26 2023 management des organisations 1re et tle bac stmg mar 21 2020 gérer jan 23 2023 les trois ouvrages de la collection passeport vendeurs s inscrivent dans la

connexions management des organisations 1re bac s - Sep 08 2022

web connexions management des organisations 1re bac s 3 3 rend compte des enjeux et des incidences des formes récentes ou émergentes de travail liées à la digitalisation du travail il répertorie des contributions qui enrichissent les réflexions les démarches de déploiement et d accompagnement des formes d organisation du travail des

connexions management des organisations 1re bac s full pdf - Dec 11 2022

web oct 16 2023 connexions management des organisations 1re bac s a stunning literary value filled with fresh emotions lies an immersive symphony waiting to be embraced constructed by a masterful musician of language this charming masterpiece conducts viewers on an emotional trip skillfully unraveling the

connexions management des organisations 1re bac s pdf - Mar 02 2022

web connexions management des organisations 1re bac s 1 connexions management des organisations 1re bac s aanwinsten van de centrale bibliotheek queteletfonds work and people objectif dcg management 2014 2015 management par projet the insurance record rédacteur territorial rédacteur territorial principal de 2e et de 1re

connexions management des organisations 1re bac s copy - Jul 06 2022

web may 27 2023 connexions management des organisations 1re bac s 2 7 downloaded from uniport edu ng on may 27 2023 by guest livres de france 2009 05 managing through organisation colin hales 1993 01 01 it addresses the central questions of what managers actually do in organizations and how in practical terms management is carried out

connexions management des organisations 1re bac s - May 04 2022

web success next to the broadcast as capably as keenness of this connexions management des organisations 1re bac s can be taken as capably as picked to act market leader david cotton 2010 history of meat alternatives 965 ce to 2014 william shurtleff 2014 12 18 the world s most comprehensive well documented and well illustrated book on

connexions management des organisations 1re bac s full pdf - Nov 29 2021

web droit management au travers de l étude d une même entreprise un objectif par double page des documents issus du

monde de l entreprise des ressources notionnelles

connexions management des organisations 1re bac s - Apr 03 2022

web oct 18 2023 connexions management des organisations 1re bac s disposition of federal records united states national archives and records service office of federal records centers 1981 managing aquifer recharge unesco 2021 11 25

connexions management des organisations tle bac s 2023 - Sep 20 2023

web economie droit management des organisations tle stg mar 07 2022 communication et organisation en 1e et tle pro bac pro comptabilité nov 15 2022 communication et organisation 1e et tle bac pro comptabilité feb 12 2020 organisation communication jul 19 2020 mes 4 épreuves du bac 1re et tle stmg may 21 2023

connexions management des organisations 1re bac s - Jun 17 2023

web connexions management des organisations 1re bac s cas d organisation de transport de marchandises 1re bac pro dec 19 2021 livres de france sep 03 2020 management des organisations 1re et tle bac stmg nov 29 2022 organisation communication jul 02 2020 vendre 1e tle bac pro dec 07 2020

connexions management des organisations 1re bac stmg - May 16 2023

web abebooks com connexions management des organisations 1re bac stmg 9782216116966 by lagedamon david favrie cédric schneider xavier braud arnaud and a great selection of similar new used and collectible books available now

connexions management des organisations 1re bac s - Aug 19 2023

web management des organisations mar 13 2021 management des organisations 1re stg apr 13 2021 management des organisations jul 29 2022 management des organisations nov 01 2022 management des organisations 1e et tle stg aug 18 2021 annuaire de la commission du droit international 2007 vol i jul 05 2020

connexions management des organisations 1re bac s - Jan 12 2023

web as competently as keenness of this connexions management des organisations 1re bac s can be taken as capably as picked to act successful qualitative research virginia braun 2013 03 22 shortlisted for the bps book award 2014 in the textbook category winner of the 2014 distinguished publication award dpa from the association for

download free connexions management des organisations 1re bac s - Apr 15 2023

web connexions management des organisations 1re bac s la gestion des organisations jan 23 2021 management des organisations publiques 2e édition revue et corrigée jan 15 2023 le management d une organisation est intrinsèquement lié aux fonctions propres à la gestion comme

connexions management des organisations 1re bac stmg by - Jul 18 2023

web connexions une entrée par des situations concrètes qui placent l élève en position d observateur d une réalité des documents variés et accrocheurs de nombreuses activités pour s entraîner

connexions management des organisations 1re bac s pdf - Nov 10 2022
web sep 12 2023 connexions management des organisations 1re bac s 1 7 downloaded from uniport edu ng on september 12 2023 by guest connexions management des organisations 1re bac s recognizing the pretension ways to acquire this book connexions management des organisations 1re bac s is additionally useful you have
connexions management des organisations 1re bac s - Dec 31 2021
web 1 introduction et théories 2 le comportement dans l organisation 3 la conduite de l organisation 4 Éléments fondamentaux de stratégie 5 les différentes fonctions au sein des organisations 6 la communication des organisations partie 2 les qcm partie 3 l épreuve partie 4 l entraînement à l épreuve mh international editions
cat sketchbook etsy - Feb 18 2023
web check out our cat sketchbook selection for the very best in unique or custom handmade pieces from our journals notebooks shops
amazon co uk cat sketchbook - Jul 23 2023
web jan 20 2023 cat sketchbook for men women girls boys and kids cute art cat sketchbook blank paper journal for drawing writing sketching wide papers 8 5 x 11 inc 100 pages by ever cat publisher 21 mar 2021
best childrens books about cats list of cat books for kids ranker - Apr 08 2022
web oct 27 2020 so many kids long before they are exposed to the cute kitten overtaking of the world wide web simply adore cats cat in fact is one of the often one of the first words a child learns to spell and pronounce this list of the best books about cats for kids spans from the famous dr seuss books to ed young s classic cat and rat
40 favorite cat books for kids imagination soup - Aug 12 2022
web mar 28 2023 happy cats by catherine amari and anouk han illustrated by emi lenox young readers will love this playful book of opposites for cat loving kids with wonderful illustrations fluffed cat bare cat round cat square cat atticus caticus by sarah maizes illustrated by kara kramer
amazon co uk sketchbook cat - Jan 17 2023
web sketchbook cats meow cats faces sketchbook for girls 8 5 x 11 120 pages cool sketchbook with a cute cats pattern on a dark starry background for drawing funny cat sketchbook by anastasia mashera 25 may 2021
just a girl who loves cats sketchbook a cute sketchbook cat - Nov 15 2022
web feb 2 2020 just a girl who loves cats sketchbook a cute sketchbook cat notebook gifts for kids teenage girls for drawing and doodling quinns cute cat journals sketch books on amazon com free shipping on qualifying offers
cat sketchbook cute cat sketchbook gift for girls boys men - Mar 19 2023
web buy cat sketchbook cute cat sketchbook gift for girls boys men women teens and kids by cat jass publisher isbn from

amazon s book store everyday low prices and free delivery on eligible orders

sketch book cute cat kawaii sketchbook for girls notebook for - Sep 13 2022

web buy sketch book cute cat kawaii sketchbook for girls notebook for drawing writing painting sketching or doodling 120 pages 8 5x11 large sketchbook journal white paper by aga jessica isbn 9798576655359 from amazon s book store free uk delivery on eligible orders

cute cat sketchbook etsy - Apr 20 2023

web cute cat sketchbook etsy check out our cute cat sketchbook selection for the very best in unique or custom handmade pieces from our journals notebooks shops

sketchbook cute cat kawaii sketchbook for girls and boys with - Jun 22 2023

web kids sketch book notebook for drawing doodling or sketching for cats lovers sketchbook journal sketchbook cute cat kawaii sketchbook for girls and boys with 100 pages of 8 5 x11 blank paper for drawing doodling or learning to draw sketch books for kids by sofia s publishing goodreads

cat sketchbook cute cat sketchbook for girls boys and adults - May 21 2023

web find many great new used options and get the best deals for cat sketchbook cute cat sketchbook for girls boys and adults artist sketchbook large notebook for drawing sketching designing painting writing by mjbooks 2019 trade paperback at the best online prices at ebay

sketchbook cute cats kawaii large sketch book and notebook for girls - Oct 14 2022

web mar 12 2022 sketchbook cute cats kawaii large sketch book and notebook for girls and artist kids to drawing and sketching or doodling 110 pages of 8 5x11 paperback march 12 2022 by sefar keys sketching author 28 ratings see all formats and editions paperback 8 30 1 new from 8 30

sketchbook cute cats kawaii large sketch book and notebook for girls - Jul 11 2022

web mar 12 2022 this kawaii cats sketchbook is the perfect place to create your masterpiece transform your ideas and aspirations into beautiful paintings also a great gift for birthdays graduation end of the school year summer travel and much more features perfect for kids girls and teens standard 8 5 x11 sized pages

sketchbook cat sketchbook for kids girls and boys 12 - Dec 16 2022

web an artist blank sketchbook is perfect clean crisp white paper for all your drawing and art wo sketchbook cat sketchbook for kids girls and boys 120 blank pages extra large size 7 5 x 9 25 cute cat cover by lhrawa publishing goodreads

sketchbook cute cat large sketch book for drawing pa - May 09 2022

web cute cat kawaii large sketch book for drawing painting and activity book designed with 100 pages perfect for sketching journaling taking notes or just having fun and getting creative 8 5 x11 best for crayons colored pencils watercolor paints and

fine tip markers the cute doodles on every page are designed to inspire creativity

amazon com cat sketch book - Aug 24 2023

web sketchbook cute cats kawaii large sketch book and notebook for girls and artist kids to drawing and sketching or doodling 110 pages of 8 5x11 by sefar keys sketching 63 paperback 699 free delivery fri oct 6 on 35 of items shipped by amazon or fastest delivery tue oct 3

1 000 free cat drawing cat images pixabay - Feb 06 2022

web cute find images of cat drawing royalty free no attribution required high quality images

amazon com kawaii sketchbook - Mar 07 2022

web sketchbook cute cats kawaii large sketch book and notebook for girls and artist kids to drawing and sketching or doodling 110 pages of 8 5x11 by sefar keys sketching 67 paperback 699 free delivery fri oct 13 on 35 of items shipped by amazon

21 purrfect cat books for kids who love kitties book riot - Jun 10 2022

web mar 19 2020 the cat from hunger mountain by ed young from caldecott medalist ed young the cat from hunger mountain is a compelling fable about greed and humility a lord cat lives high on a mountain living a gluttonous life that reflects his wealth however when a drought sweeps through the region the lord s lifestyle is sorely tested

amazon com cat sketchbook - Sep 25 2023

web sketchbook cute cats kawaii large sketch book and notebook for girls and artist kids to drawing and sketching or doodling 110 pages of 8 5x11 by sefar keys sketching 57 paperback 699 free delivery fri aug 4 on 25 of items shipped by amazon

warfare prayers to revoke evil decrees everyday prayer guide - Jan 25 2022

web warfare prayers and decrees declaration 2000 apostle tracy howard closing breaches hedges releasing the power of the blood 5 9 6 daniel prayer dr richard ing prayers

7 powerful spiritual warfare prayers blissful christian - Nov 03 2022

web this book contains powerful warfare prayers and decrees taken from scripture that will break the powers of darkness and release the blessings and favor of god the advance

7 powerful spiritual warfare prayers blissful christian inspirations - Jul 31 2022

web apr 6 2022 when the enemy chases you 2 when you are in danger 3 when contending against a very wicked spirit 4 when satan is bent on turning your joy into

warfare prayers and decrees howtopray today - Apr 08 2023

web spiritual warfare prayer mark bubeck tools for warfare blessed is the man who perseveres under trial because when he

has stood the test he will receive
50 powerful decree and declare prayers impacting prayer - Mar 27 2022
web oct 8 2023 by christopher wells please stop the attacks and the weapons pope francis pleaded on sunday and understand that terrorism and war do not lead to any
spiritual warfare prayers walking in power - Mar 07 2023
web feb 23 2022 1 spiritual warfare prayers by family sublime father thank you for my family thank you for the unseen battles you ve been fighting for contact for adenine
spiritual warfare prayer cru - Jan 05 2023
web the only way you can make god fight for you is through warfare prayers grab these spiritual warfare prayer points and silence the devil 1 contend o lord with those who
120 can t ignore spiritual warfare prayer points for vieforth - Oct 02 2022
web nov 3 2019 1 father i thank you for empowering me with divine authority in jesus name 2 i decree that before the end of this
15 powerful i decree and declare spiritual warfare prayer - Jul 11 2023
web may 28 2010 warfare prayers and decrees for you your family ministry church city region or nation update 5 28 10 we have proven these prayers are very effective
spiritual warfare prayers world overcomers outreach ministries - Feb 06 2023
web nov 5 2020 warfare prayers and decrees are you in search of warfare prayers and decrees if so i ve got you covered the scriptures made it clear that everything a child
100 powerful warfare prayer points with scriptures - Sep 01 2022
web aug 2 2023 practicing spiritual warfare declarations and decrees can be done through prayer meditating on god s word and speaking them aloud or writing them down five
warfare prayers and decrees pdf deliverance ministry - Oct 22 2021

spiritual warfare prayers declarations and decrees to release - Feb 23 2022
web warfare prayers and decrees for you your family ministry church city region or nation update 5 28 10 we have proven these prayers are very effective in changing
warfare prayers and scriptures raise your sword - May 09 2023
web 1 spiritual warfare prayers 2022 theme meditating on god s word joshua 1 8 proverbs 4 20 22 philippians 4 8 world overcomers outreach ministries church 6655

spiritual warfare declarations and decrees statements - Apr 27 2022
web aug 15 2023 warfare prayers and decrees prayer for protection heavenly father i decree and declare your divine protection over my life i declare that no weapon formed
hisplea warfare prayers and decrees book - Jun 29 2022
web spiritual warfare contains powerful prayers declarations and decrees to release god s blessing into every area of your life and to break the powers of darkness over you and
pope prays for peace in israel and palestine every war is a defeat - Nov 22 2021

what is warfare prayer gotquestions org - Dec 04 2022
web feb 23 2022 powerful spiritual warfare decrees and prayer points table of contents show 1 spiritual warfare prayers for family heavenly father thank you for my family
warfare prayers and decrees pdf jesus in islam sin scribd - Sep 20 2021

warfare and decree prayers cynthia pinckney - Aug 12 2023
web 1 a prayer for invoking god s power in spiritual battle mighty god i humbly come before you recognizing the power of your name i invoke your power in the midst of spiritual
warfare prayers and decrees everyday prayer guide - Sep 13 2023
web jul 6 2020 we must also learn to exercise our authority as a child of god the bible says those that their god shall be strong and they shall do great exploit so when we pray warfare prayers we must decree things in this article we have compiled a list of
44 decree and declare prayer points everyday prayer guide - May 29 2022
web nov 23 2019 we shall be engaging in warfare prayers to revoke evil decrees this warfare prayers will empower you to overturn every evil declaration sent to your life and
warfare prayers and decrees conciencia radio pdf - Jun 10 2023
web jun 1 1999 51 warfare prayer for an unsaved or saved but in sin son daughter spouse relative friend 52 prayers of praise 53 prayers of intercession and
35 mighty decree and declare prayers for spiritual breakthroughs - Dec 24 2021