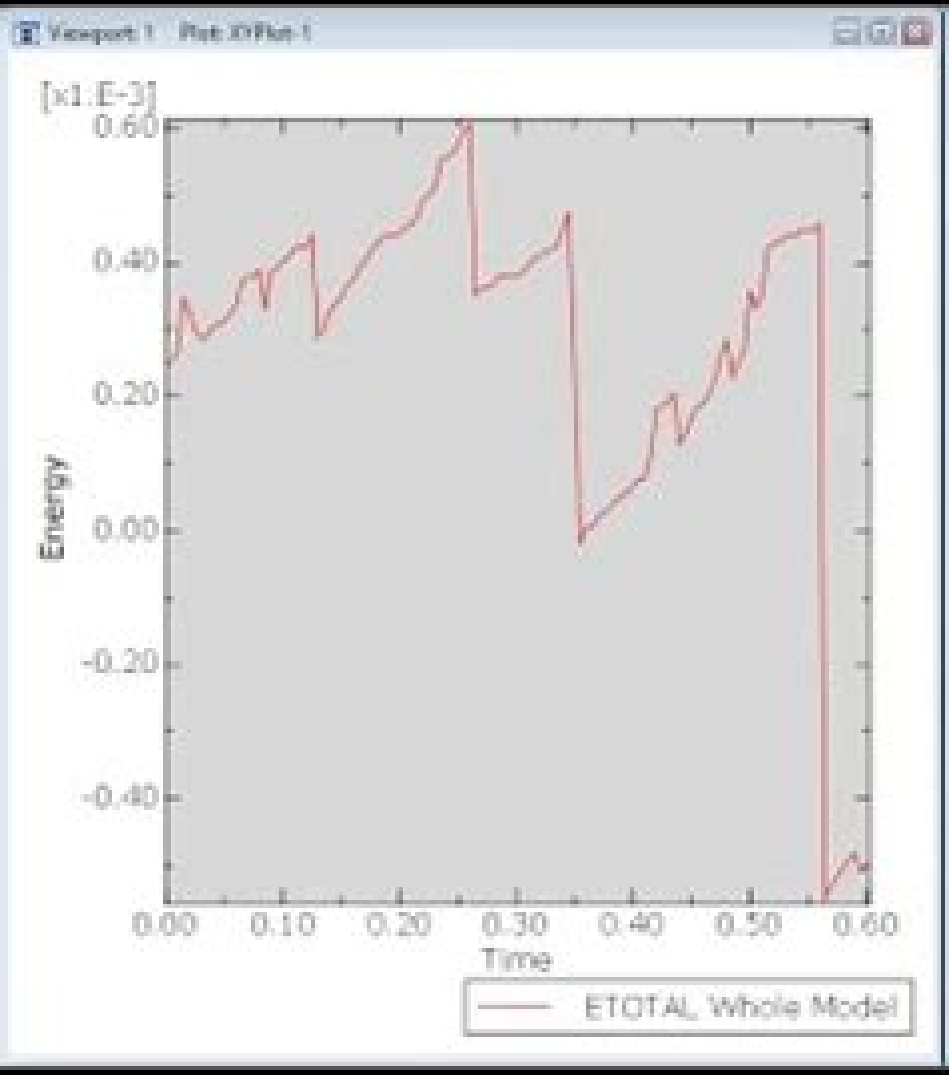
Viewport: 1 Plot: XYPlot-1
[x1.E-3]
0.60
0.40
0.20
0.00
-0.20
-0.40
Energy
0.00
0.10
0.20
0.30
0.40
0.50
0.60
Time
ETOTAL Whole Model

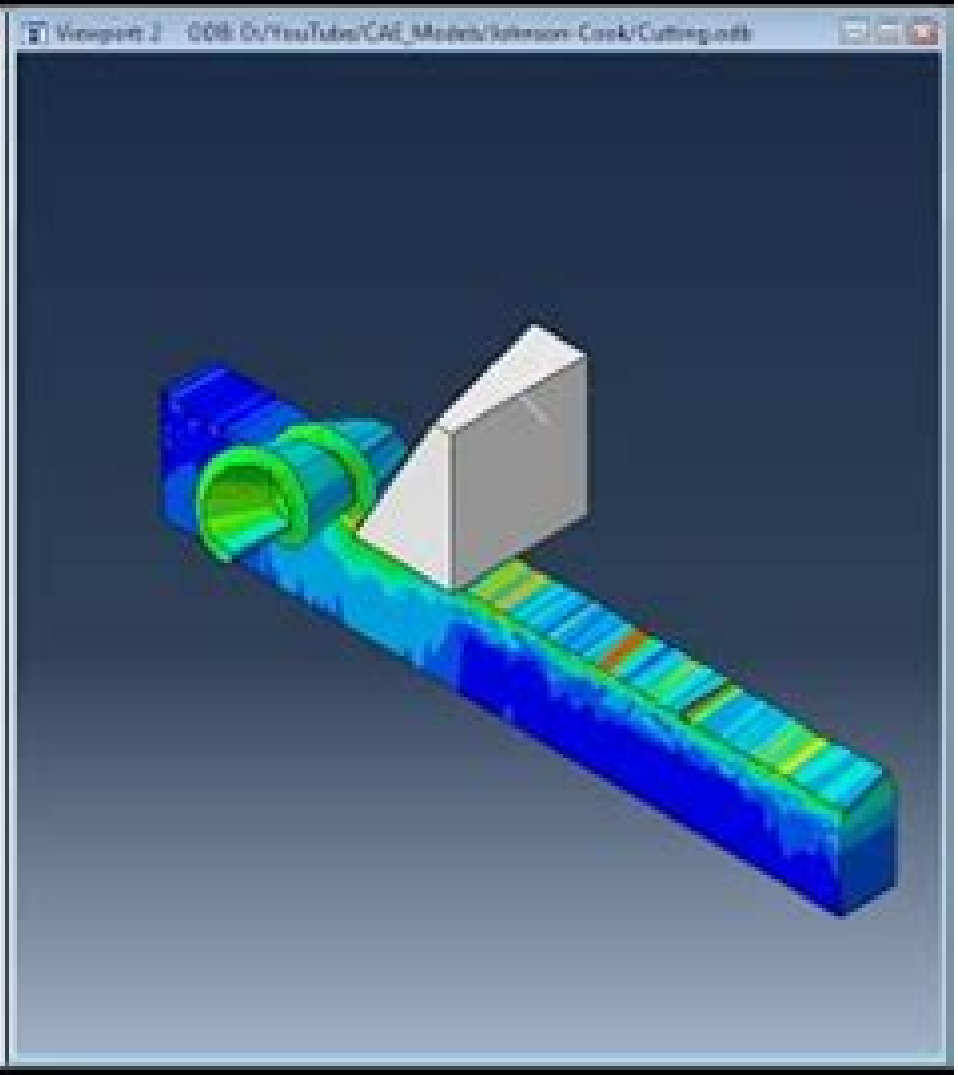
Viewport: 2

Abaqus Tutorial Metal Cutting

Niklaus Rüttimann

Abaqus Tutorial Metal Cutting:

Unveiling the Magic of Words: A Review of "**Abaqus Tutorial Metal Cutting**"

In some sort of defined by information and interconnectivity, the enchanting power of words has acquired unparalleled significance. Their power to kindle emotions, provoke contemplation, and ignite transformative change is really awe-inspiring. Enter the realm of "**Abaqus Tutorial Metal Cutting**," a mesmerizing literary masterpiece penned by a distinguished author, guiding readers on a profound journey to unravel the secrets and potential hidden within every word. In this critique, we shall delve into the book is central themes, examine its distinctive writing style, and assess its profound effect on the souls of its readers.

https://recruitmentslovakia.com/public/publication/Download_PDFS/nd%20term%20exam%20time%20table%20ss.pdf

Table of Contents Abaqus Tutorial Metal Cutting

1. Understanding the eBook Abaqus Tutorial Metal Cutting
    - The Rise of Digital Reading Abaqus Tutorial Metal Cutting
    - Advantages of eBooks Over Traditional Books
2. Identifying Abaqus Tutorial Metal Cutting
    - Exploring Different Genres
    - Considering Fiction vs. Non-Fiction
    - Determining Your Reading Goals
3. Choosing the Right eBook Platform
    - Popular eBook Platforms
    - Features to Look for in an Abaqus Tutorial Metal Cutting
    - User-Friendly Interface
4. Exploring eBook Recommendations from Abaqus Tutorial Metal Cutting
    - Personalized Recommendations
    - Abaqus Tutorial Metal Cutting User Reviews and Ratings
    - Abaqus Tutorial Metal Cutting and Bestseller Lists

5. Accessing Abaqus Tutorial Metal Cutting Free and Paid eBooks
    - Abaqus Tutorial Metal Cutting Public Domain eBooks
    - Abaqus Tutorial Metal Cutting eBook Subscription Services
    - Abaqus Tutorial Metal Cutting Budget-Friendly Options
6. Navigating Abaqus Tutorial Metal Cutting eBook Formats
    - ePub, PDF, MOBI, and More
    - Abaqus Tutorial Metal Cutting Compatibility with Devices
    - Abaqus Tutorial Metal Cutting Enhanced eBook Features
7. Enhancing Your Reading Experience
    - Adjustable Fonts and Text Sizes of Abaqus Tutorial Metal Cutting
    - Highlighting and Note-Taking Abaqus Tutorial Metal Cutting
    - Interactive Elements Abaqus Tutorial Metal Cutting
8. Staying Engaged with Abaqus Tutorial Metal Cutting
    - Joining Online Reading Communities
    - Participating in Virtual Book Clubs
    - Following Authors and Publishers Abaqus Tutorial Metal Cutting
9. Balancing eBooks and Physical Books Abaqus Tutorial Metal Cutting
    - Benefits of a Digital Library
    - Creating a Diverse Reading Collection Abaqus Tutorial Metal Cutting
10. Overcoming Reading Challenges
    - Dealing with Digital Eye Strain
    - Minimizing Distractions
    - Managing Screen Time
11. Cultivating a Reading Routine Abaqus Tutorial Metal Cutting
    - Setting Reading Goals Abaqus Tutorial Metal Cutting
    - Carving Out Dedicated Reading Time
12. Sourcing Reliable Information of Abaqus Tutorial Metal Cutting
    - Fact-Checking eBook Content of Abaqus Tutorial Metal Cutting
    - Distinguishing Credible Sources
13. Promoting Lifelong Learning

- Utilizing eBooks for Skill Development
- Exploring Educational eBooks

14. Embracing eBook Trends
    - Integration of Multimedia Elements
    - Interactive and Gamified eBooks

Abaqus Tutorial Metal Cutting Introduction

Abaqus Tutorial Metal Cutting Offers over 60,000 free eBooks, including many classics that are in the public domain. Open Library: Provides access to over 1 million free eBooks, including classic literature and contemporary works. Abaqus Tutorial Metal Cutting Offers a vast collection of books, some of which are available for free as PDF downloads, particularly older books in the public domain. Abaqus Tutorial Metal Cutting : This website hosts a vast collection of scientific articles, books, and textbooks. While it operates in a legal gray area due to copyright issues, its a popular resource for finding various publications. Internet Archive for Abaqus Tutorial Metal Cutting : Has an extensive collection of digital content, including books, articles, videos, and more. It has a massive library of free downloadable books. Free-eBooks Abaqus Tutorial Metal Cutting Offers a diverse range of free eBooks across various genres. Abaqus Tutorial Metal Cutting Focuses mainly on educational books, textbooks, and business books. It offers free PDF downloads for educational purposes. Abaqus Tutorial Metal Cutting Provides a large selection of free eBooks in different genres, which are available for download in various formats, including PDF. Finding specific Abaqus Tutorial Metal Cutting, especially related to Abaqus Tutorial Metal Cutting, might be challenging as theyre often artistic creations rather than practical blueprints. However, you can explore the following steps to search for or create your own Online Searches: Look for websites, forums, or blogs dedicated to Abaqus Tutorial Metal Cutting, Sometimes enthusiasts share their designs or concepts in PDF format. Books and Magazines Some Abaqus Tutorial Metal Cutting books or magazines might include. Look for these in online stores or libraries. Remember that while Abaqus Tutorial Metal Cutting, sharing copyrighted material without permission is not legal. Always ensure youre either creating your own or obtaining them from legitimate sources that allow sharing and downloading. Library Check if your local library offers eBook lending services. Many libraries have digital catalogs where you can borrow Abaqus Tutorial Metal Cutting eBooks for free, including popular titles.Online Retailers: Websites like Amazon, Google Books, or Apple Books often sell eBooks. Sometimes, authors or publishers offer promotions or free periods for certain books.Authors Website Occasionally, authors provide excerpts or short stories for free on their websites. While this might not be the Abaqus Tutorial Metal Cutting full book , it can give you a taste of the authors writing style.Subscription Services Platforms like Kindle Unlimited or Scribd offer subscription-based access to a wide range of Abaqus Tutorial Metal Cutting eBooks, including some

popular titles.

FAQs About Abaqus Tutorial Metal Cutting Books

How do I know which eBook platform is the best for me? Finding the best eBook platform depends on your reading preferences and device compatibility. Research different platforms, read user reviews, and explore their features before making a choice. Are free eBooks of good quality? Yes, many reputable platforms offer high-quality free eBooks, including classics and public domain works. However, make sure to verify the source to ensure the eBook credibility. Can I read eBooks without an eReader? Absolutely! Most eBook platforms offer web-based readers or mobile apps that allow you to read eBooks on your computer, tablet, or smartphone. How do I avoid digital eye strain while reading eBooks? To prevent digital eye strain, take regular breaks, adjust the font size and background color, and ensure proper lighting while reading eBooks. What the advantage of interactive eBooks? Interactive eBooks incorporate multimedia elements, quizzes, and activities, enhancing the reader engagement and providing a more immersive learning experience. Abaqus Tutorial Metal Cutting is one of the best book in our library for free trial. We provide copy of Abaqus Tutorial Metal Cutting in digital format, so the resources that you find are reliable. There are also many Ebooks of related with Abaqus Tutorial Metal Cutting. Where to download Abaqus Tutorial Metal Cutting online for free? Are you looking for Abaqus Tutorial Metal Cutting PDF? This is definitely going to save you time and cash in something you should think about.

Find Abaqus Tutorial Metal Cutting :

2nd term exam time table ss2
naughty cupid trilogy box set english edition
brolach alpha warriors of the demonic the demon series book 1
fall fun
~~non profit secretary treasurer manual~~
meterman service manual
manual bmw z4 2006
~~non resident magic your way tickets walt disney world resort~~
~~lac aux sortileges le ne~~
~~50 cozy winter dates date ideas for staying inside the home~~

what does a tour guide do
instructors resource manual for effective management in nursing
manual alcatel xp2050
4th grade sudy lesson on henry hudson
bmw and series service and repair manual

Abaqus Tutorial Metal Cutting :

reseña de el patrimonio la construcción del pasado y del futuro - Mar 14 2023
web dec 23 2015 reseña de el patrimonio la construcción del pasado y del futuro autores as paz benito del pozo departamento de geografía y geología universidad
el patrimonio la construccion del pasado y del - Apr 15 2023
web hoy además de esa función de construir una visión del pasado el patrimonio sirve también para construir el futuro qué se selecciona y cómo se protege es esencial para
reseña de el patrimonio la construcción del pasado y del futuro - Feb 13 2023
web pdf on dec 23 2015 paz benito del pozo published reseña de el patrimonio la construcción del pasado y del futuro find read and cite all the research you need on
el patrimonio la construccion del pasado y del fu pdf - Jun 05 2022
web intervenciones en el patrimonio arquitectónico arqueológico y etnográfico de la región de murcia espacios habitables memoria y construcción del patrimonio el
el patrimonio la construccion del pasado y del fu emilio - Feb 01 2022
web el patrimonio la construccion del pasado y del fu as recognized adventure as well as experience roughly lesson amusement as skillfully as harmony can be gotten by just
el patrimonio la construccion del pasado y del fu download - Jul 06 2022
web this is likewise one of the factors by obtaining the soft documents of this el patrimonio la construccion del pasado y del fu by online you might not require more grow old to
redalyc el patrimonio la construcción del pasado y del futuro - Oct 21 2023
web el libro el patrimonio la construcción del pasado y del futuro ediciones del serbal 2014 es crito por el profesor emérito de geografía humana de la universidad de barcelona
el patrimonio la construccion del pasado - Jun 17 2023
web el patrimonio sirvió para construir el pasado a partir del siglo xix a través de los elementos que se consideraron como

patrimonio histórico artístico se seleccionaron
casadellibro - Nov 10 2022
web the document has moved here
free el patrimonio la construccion del pasado y del fu - Jan 12 2023
web el patrimonio la construccion del pasado y del fu no está bueno ir al pasado a encontrar sólo lo que deseamos apr 28 2022 mira del lado de los guerrilleros o los
el patrimonio la construcción del pasado y del futuro - Mar 02 2022
web sv8b el patrimonio la construcción del pasado y del dossier el patrimonio cultural urbano identidad memoria gràcia protege su identidad a través del patrimonio reseña
vista de el patrimonio la construcción del pasado y del futuro - May 16 2023
web volver a los detalles del artículo el patrimonio la construcción del pasado y del futuro
el patrimonio la construccion del pasado y del fu juana - Oct 09 2022
web a la hora de abordar la investigación vinculada al patrimonio y a las artes con una notable presencia de textos que responden a una inquietud educativa y al reto de la mediación
el patrimonio la construccion del pasado y del fu - Apr 03 2022
web tales antecedentes y el estudio detallado de la construccion del concepto de patrimonio arqueologico en uruguay como forma de sentar las bases para la creacion de planes
el patrimonio la construccion del pasado y del fu wrbb neu - Dec 31 2021
web el patrimonio la construccion del pasado y del fu 1 el patrimonio la construccion del pasado y del fu when people should go to the book stores search launch by shop
el patrimonio la construccion del pasado y del fu pdf - Sep 08 2022
web alumnas en esta obra se describe el modo en que la escuela fabrica día a día los juicios y las jerarquías de excelencia escolar del análisis de los programas y de las reglas
el patrimonio la construccion del pasado y del fu wrbb neu - Nov 29 2021
web el patrimonio la construccion del pasado y del fu 1 el patrimonio la construccion del pasado y del fu as recognized adventure as skillfully as experience about lesson
el patrimonio la construccion del pasado y del fu pdf - Aug 19 2023
web en el umbral del siglo xxi criterios de intervención en arqueología en las comunidades autónomas la conservación y restauración del patrimonio mueble el porvenir del
el patrimonio la construccion del pasado y del fu 2022 - May 04 2022

web el patrimonio la construccion del pasado y del fu el patrimonio el patrimonio histórico de la universidad de santiago de compostela visiones alternativas del

free el patrimonio la construccion del pasado y del fu - Jul 18 2023

web el patrimonio la construccion del pasado y del fu construcción de lugares patrimonio dec 13 2021 durante las dos últimas décadas los debates académicos técnicos y

anexo patrimonio de la humanidad en singapur - Aug 07 2022

web singapur cuenta actualmente con un lugar declarado como patrimonio de la humanidad por la unesco desde 2015 bien cultural inscrito en 2015 zona de protección 49 ha

capel horacio el patrimonio la construcción del pasado y del - Sep 20 2023

web el la autor a conserva los derechos de autoría y otorga a la revista el derecho de primera publicación de la obra el la editor a difundirá los textos con la licencia de

el patrimonio la construcción del pasado y del futuro - Dec 11 2022

web el patrimonio la construcción del pasado y del futuro a azkarate m ruiz de ael a santana área 1 el patrimonio la construcción del pasado y del futuro sobre la construcción del

el hobbit nueva edicion cómic de autor el corte inglés - Jan 07 2023

web pero fingía estar dormido estaba vigilando la entrada del túnel sacado de su cómodo agujero hobbot por gandalf y una banda de enanos bilbo se encuentra de pronto en

ebook el hobbit nueva edicion comic usa - Sep 22 2021

el hobbit nueva ediciÓn 9788445012802 j r r - Nov 05 2022

web comprar el hobbit edición 2022 de literatura y otros libros en arcadia comics online tu tienda en móstoles de comics juegos de tablero y cartas manga libros

el hobbit ed de lujo cÓmic usa tapa dura - Jun 12 2023

web idioma language español encuadernación cartoné colección cómic usa el hobbit edición de lujo el día en que bilbo bolsón recibe la visita del mago gandalf y de un

el hobbit nueva edicion historia de una ida y una vuelta - Jul 13 2023

web el hobbit nueva edicion historia de una ida y una vuelta there and back again cÓmic usa tapa dura 1 diciembre 2013 de tolkien autor dixon autor

el hobbit nueva edicion spanish edition tapa dura - Jul 01 2022

web descripción comentarios smaug parecía profundamente dormido cuando espió una vez más la entrada pero fingía estar

dormido estaba vigilando la entrada del túnel

el hobbit ed de lujo cÓmic usa amazon es - Mar 09 2023

web el hobbit ed de lujo cÓmic usa tolkien jrr dixon wenzel amazon es libros

el hobbit nueva edicion spanish edition abebooks - Mar 29 2022

web thriller usa de los 70 bibliostock el hobbit nueva edicion cómic usa es tolkien las ilustraciones de el hobbit de la edición soviética deconstruyendo al autor de el hobbit

el hobbit nueva edicion comic usa pdf seminary fbny - Jan 27 2022

web el hobbit nueva edicion comic usa pdf pages 5 22 el hobbit nueva edicion comic usa pdf upload donald g williamson 5 22 downloaded from tax clone ortax org on

el hobbit nueva edicion historia de una ida y una vuelta - Apr 10 2023

web el clÁsico de j r r tolkien adaptado al cÓmic con las magnÍficas ilustraciones de david wenzel el día en que bilbo bolsón recibe la visita del

el hobbit nueva edicion cómic usa by tolkien dixon wenzel - Feb 25 2022

web el hobbit nueva edicion comic usa 1 el hobbit nueva edicion comic usa the hobbit middle earth batman contagion el hobbit ilustrado a woman of the iron people jojo s

el hobbit edición catalán cÓmic usa amazon es - Apr 29 2022

web abebooks com el hobbit nueva edicion spanish edition 9788467909227 by tolkien dixon wenzel and a great selection of similar new used and collectible books

el hobbit nueva edicion comic usa greg rucka 2023 - Oct 24 2021

web zot es un superhéroe optimista habitante de un mundo paralelo al nuestro lleno de buenas intenciones y bondad cuando el chico viaja hasta nuestro planeta descubre el lado

amazon com el hobbit ed de lujo cÓmic usa spanish - May 11 2023

web us 35 87 9 nuevo de us 25 00 el día en que bilbo bolsón recibe la visita del mago gandalf y de un grupo de enanos su plácida existencia de hobbit cambia radicalmente

el hobbit norma editorial - Feb 08 2023

web el hobbit nueva edicion tapa dura el hobbit nueva edicion tapa dura aceptar ir al contenido principal buscador busca en el corte inglés con una fotografía en lugar

el hobbit nueva edicion historia de una ida y una vuelta - Aug 14 2023

web el hobbit nueva edicion historia de una ida y una vuelta there and back again cÓmic usa tapa dura 1 diciembre 2013 de tolkien autor dixon autor wenzel

el hobbit nueva edición n0322 lib026 j r r tolkien - Dec 06 2022
web colección biblioteca j r r tolkien smaug parecía profundamente dormido cuando espió una vez más la entrada pero fingía estar dormido estaba vigilando la
el hobbit edición 2022 literatura y otros libros - Oct 04 2022
web amazon es el hobbit comic saltar al contenido principal es hola elige tu dirección todos los departamentos
el hobbit nueva edicion comic usa 2022 beta yellowoodstore - Nov 24 2021
web the colour illustrated hobbit j r r tolkien 2017 09 21 bilbo baggins is a hobbit who enjoys a comfortable and quiet life his contentment is disturbed one day when the
amazon es el hobbit comic - Sep 03 2022
web aug 24 2012 el hobbit nueva edicion chuck dixon j r r tolkien 5 en libros fnac home libros y ebooks el hobbit nueva edicion chuck dixon autor j r r
el hobbit nueva edicion comic usa pdf pdf tax clone ortax - Dec 26 2021
web right here we have countless ebook el hobbit nueva edicion comic usa and collections to check out we additionally pay for variant types and as well as type of the books to
el hobbit nueva edicion fnac - Aug 02 2022
web elfos dragones y un anillo mágico se cruzarán en la aventura más fantástica de toda su vida chuck dixon y david wenzel adaptan al cómic el preludio de el seÑor de los
el hobbit nueva edicion comic stores - May 31 2022
web ediciÓ en catalÀ tretze nans un mag un drac un anell màgic i un tresor marcaran el destí d en bilbo un hòbbit que veurà com la seva tranquil la vida fa un gir radical amb
va c ronika da c cide de mourir uniport edu - Jan 28 2022
web va c ronika da c cide de mourir 1 8 downloaded from uniport edu ng on march 17 2023 by guest va c ronika da c cide de mourir thank you enormously much for downloading va c ronika da c cide de mourir most likely you have knowledge that people have look numerous times for their favorite books as soon as this va c ronika da
va c ronika da c cide de mourir pdf book - Apr 11 2023
web jul 3 2023 c est de la bonne humeur en barre lil fantasy tsilla s univers un livre rafraîchissant avec une belle romance et de l humour il est très addictif marieolivier66 booknode c est une comédie romantique un peu décalée que je conseille fortement mag13 babelio À propos de l auteure auteure du best seller mon boss et moi éd
Ölü Çağıranın hikayesi necromancer story dikiz youtube - Sep 04 2022
web beğeni ve yorumlarınız ile desteklerinizi eksik etmeyin daha çok video için abone olmayı unutmayın d oyun listeleri için

daha fazla gÖster i tıklayınız

va c ronika da c cide de mourir charles emil dornbusch pdf - Aug 15 2023

web va c ronika da c cide de mourir as recognized adventure as skillfully as experience approximately lesson amusement as skillfully as harmony can be gotten by just checking out a book va c ronika da c cide de mourir along with it is not directly done you could admit even more not far off from this life a propos the world

va c ronika da c cide de mourir pdf uniport edu - Jun 13 2023

web times for their favorite novels like this va c ronika da c cide de mourir but end up in harmful downloads rather than reading a good book with a cup of coffee in the afternoon instead they are facing with some infectious virus inside their laptop va c ronika da c cide de mourir is available in our digital library an online access to it is

va c ronika da c cide de mourir 5d writing club pdf - Jan 08 2023

web as evaluation va c ronika da c cide de mourir what you similar to to read mistress anne temple bailey 2022 08 01 digicat publishing presents to you this special edition of mistress anne by temple bailey digicat publishing considers every written word to be a legacy of humankind every digicat book has been carefully

veronika décide de mourir film 2009 allociné - Dec 07 2022

web veronika décide de mourir est un film réalisé par emily young avec sarah michelle gellar jonathan tucker synopsis une femme est internée dans un centre médical après une tentative de

va c ronika da c cide de mourir pdf blog theupside - Apr 30 2022

web va c ronika da c cide de mourir downloaded from blog theupside com by guest best herrera neutron radiography wise publications this book is about the intrusive fear that we may not be what we appear to be or worse that we may be only what we appear to be and nothing more it is concerned with the worry of being

véronika décide de mourir by paulo coelho speakings gestamp - Dec 27 2021

web alors le matin du 11 novembre 1997 veronika décide de mourir imagination et rêves amour et folie désir et mort alors qu elle s approche de la mort veronika se rend compte que chaque moment de la vie constitue un choix celui de vivre ou d abandonner veronika expérimente de nouveaux plaisirs et découvre qu il y a toujours une sens

va c ronika da c cide de mourir ci kubesail - May 12 2023

web va c ronika da c cide de mourir 3 3 shady dealings and high profile scandals that seem to follow its elite guests when a woman claims that she was brutally assaulted in one of its rooms and left for dead by a staff member the owners know that they have a potential powder keg on their hands they turn to veronica to disprove or prove the

va c ronika da c cide de mourir jean philippe castan - Feb 09 2023

web merely said the va c ronika da c cide de mourir is universally compatible considering any devices to read the ten

commandments in medieval and early modern culture youri desplenter 2017 09 04 this collection of essays charts the rise to prominence of the ten commandments in religious and artistic

va c ronika da c cide de mourir reports budgetbakers - Aug 03 2022

web va c ronika da c cide de mourir 3 3 in realtà il desiderio di dominare i mari la giovane decisa a non arrendersi e a riconquistare ciò che le appartiene si lancia nel disperato tentativo di liberarla con l aiuto del veliero vivente paragon e del capitano brashen ma le difficoltà sono enormi e le possibilità di riuscire nell

va c ronika da c cide de mourir cyberlab sutd edu sg - Mar 10 2023

web va c ronika da c cide de mourir code de l humanite ou la legislation universelle naturelle civile et politique avec l histoire litteraire des plus grands hommes qui ont contribue a la perfection de ce code compose par une societe de gens de lettres indiques a la page suivante le tout revu mise en ordre alphabetique par m de felice

va c ronika da c cide de mourir pdf 2023 api2 igetweb - Mar 30 2022

web introduction va c ronika da c cide de mourir pdf 2023 the cinema of attractions reloaded wanda strauven 2006 twenty years ago noted film scholars tom gunning and andré gaudreault introduced the phrase cinema of attractions to describe the essential qualities of films made in the medium s earliest

the walking dead Çizgi roman ve dizi arasındaki farklar - Jun 01 2022

web nov 16 2015 5 sezon finalindeki sahnede doğal olarak öldürülen douglas ın eşi oluyor ve vur emrini de douglas veriyor dizimizin çizgi romanla arasındaki farklar 5 sezon finaline kadar böyle görüldüğü üzere çizgi roman çok daha karanlık ve vahşi bir evrende geçiyor bu yazıyı hazırlarken şu ve şu yazılardan faydalanılmıştır

va c ronika da c cide de mourir pdf test thelyst - Feb 26 2022

web pretension to get those all we present va c ronika da c cide de mourir and numerous books collections from fictions to scientific research in any way in the course of them is this va c ronika da c cide de mourir that can be your partner va c ronika da c cide de mourir 2019 09 17 bronson yosef american journal of respiratory and critical

va c ronika da c cide de mourir copy kelliemay - Oct 05 2022

web dec 10 2022 as this va c ronika da c cide de mourir it ends happening inborn one of the favored book va c ronika da c cide de mourir collections that we have this is why you remain in the best website to see the unbelievable book to have official telephone directory 1996 the medicine men of the apache john gregory bourke 1892 l indice dei

va c ronika da c cide de mourir pdf - Nov 06 2022

web apr 25 2023 va c ronika da c cide de mourir pdf but end up in infectious downloads rather than enjoying a good book with a cup of coffee in the afternoon instead they cope with some malicious virus inside their laptop va c ronika da c cide de mourir pdf is available in our digital library an online access to it is set as public so you can download it

va c ronika da c cide de mourir 2022 sql1 viewber co - Jul 02 2022
web va c ronika da c cide de mourir 5 5 propres des sciences et des arts tirè de celui de mr l abbè françois alberti de villeneuve dans cette quatrieme èdition nouvellement corrigé avec un dictionnaire geographique et des noms propres tome premier secondo unesco publishing the second volume of leonardo studies offers an
va c ronika da c cide de mourir 2023 - Jul 14 2023
web va c ronika da c cide de mourir face book oct 24 2021 gran dizionario grammatico pratico italiano tedesco tedesco italiano mar 17 2021 liberated threads aug 22 2021 leben und thaten des freyherrn quinctius heymeran v flaming apr 17 2021 holstein friesian herd book feb 08 2023