Camshafts / Cam Carrier / Cam Chain Tensioner

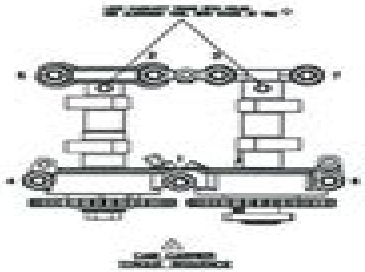

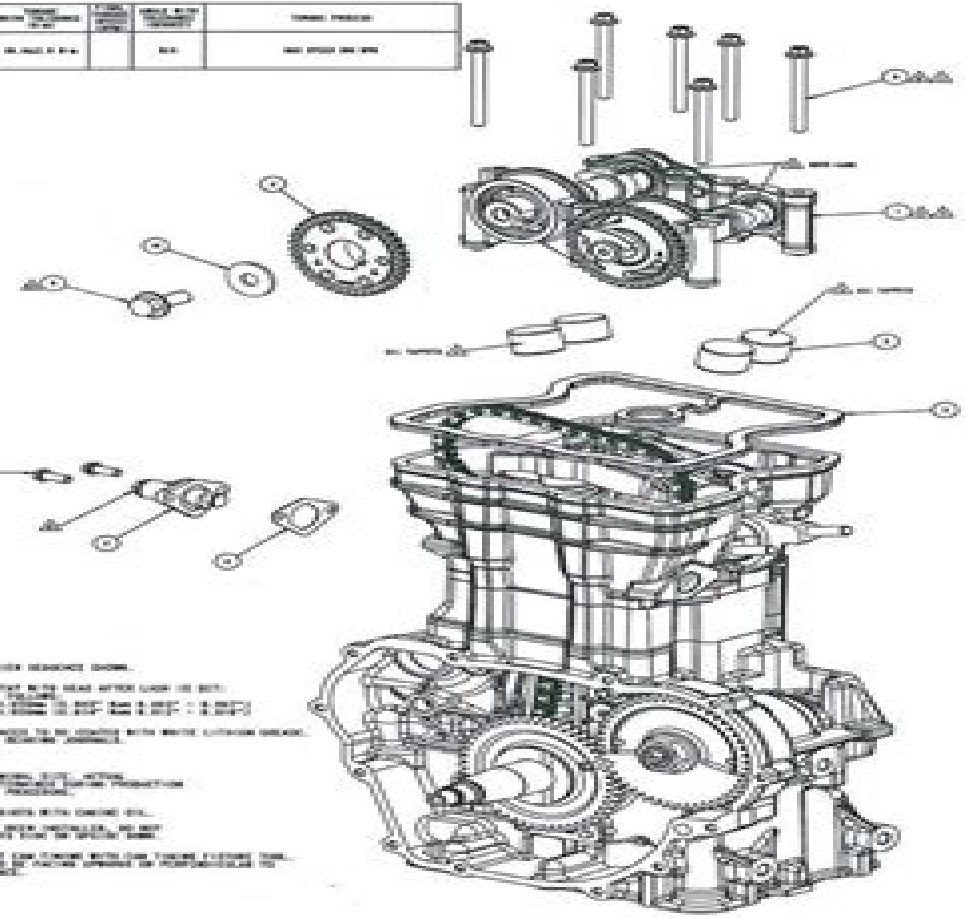

FASTENER TORQUE TABLE	

NOTES:

© Copyright Polaris Industries Inc.

RepairManual.com

2015 Polaris Sportsman 500 Service Manual

Alan Ahlstrand,Ken Freund

2015 Polaris Sportsman 500 Service Manual:

Polaris Sportsman 400, 450 & 500 1996-2013 Manual Penton Staff,2000-05-24 Sportman 400 2001 2005 Sportsman 450 2006 2007 Sportsman 450 Browning Edition 2006 Sportsman 500 1996 2010 Sportsman 500 RSE 2000 2002 Sportsman 500 DUSE 2001 2002 Sportsman 500 HO 2001 2006 2008 2010 Sportsman 500 X2 2006 2010 Sp **Polaris Sportsman 600, 700, & 800 Series 2002-2010** Penton Staff,2000-05-24 Sportsman 600 2003 2005 Sportsman 700 2002 2006 Sportsman 700 EFI 2004 2007 Sportsman 700 EFI X2 2008 Sportsman MV7 2005 2006 Sportsman 800 EFI 2005 2010 Sportsman 800 EFI X2 2007 2009 Sportsman 800 EFI Touring 2008 2009 Polaris ATV Owners Workshop Manual Alan Ahlstrand,John Harold Haynes,2004 The purpose of this manual is to help you get the best value from your ATV It can help you decide what work must be done even if you choose to have it done by a dealer service department or a repair shop it provides information and procedures for routine maintenance and servicing and it offers diagnostic and repair procedures to follow when trouble occurs This book should allow you to tackle any job yourself nbs **Clymer Polaris Sportsman 400, 450 & 500, 1996-2010** Ed Scott,2010 A-100 Compact Service Manual Chrysler Corporation,1967* *Polaris Scrambler 500 ATV* Penton Staff,2000-05-24 Scrambler 500 4x4 1997 2000 **Polaris ATVs 250-800cc, '98-'07** Alan Ahlstrand,Ken Freund,2018-05-01 Each Haynes manual provides specific and detailed instructions for performing everything from basic maintenance and troubleshooting to a complete overhaul of the machine in this case the Polaris ATVs 250 800cc model years 1998 through 2007 Do it yourselfers will find this service and repair manual more comprehensive than the factory manual making it an indispensable part of their tool box A typical Haynes manual covers general information troubleshooting lubrication and routine maintenance engine top end engine lower end primary drive clutch and external shift mechanism transmission and internal shift mechanism engine management system electrical system wheels tires and drivebelt front suspension and steering rear suspension brakes body and color wiring diagrams An index makes the manual easy to navigate

A100 Compact Service Manual Chrysler Corporation. Dodge Division,1967* **Clymer Polaris RZR 800 2008-2014** Haynes Publishing,2017-10-21 The Polaris RZR 800 off road vehicles are very popular and built with precision engineering to ensure a long life With the help of the Clymer Polaris RZR 800 2008 2014 Repair Manual in your toolbox you will be able to maintain service and repair your RZR 800 to extend the life of your machine for years to come Clymer manuals are very well known for their thorough and comprehensive nature This manual is loaded with step by step procedures along with detailed photography exploded views charts and diagrams to enhance the steps associated with a service or repair task This Clymer manual is organized by subsystem with procedures grouped together for specific topics such as front suspension brake system engine and transmission It includes color wiring diagrams The language used in this Clymer repair manual is targeted toward the novice mechanic but is also very valuable for the experienced mechanic The service manual by Clymer is an authoritative piece of DIY literature and should provide you the confidence you need to get the job done and save money too

Discover tales of courage and bravery in Crafted by is empowering ebook, Stories of Fearlessness: **2015 Polaris Sportsman 500 Service Manual** . In a downloadable PDF format (Download in PDF: *), this collection inspires and motivates. Download now to witness the indomitable spirit of those who dared to be brave.

https://recruitmentslovakia.com/files/publication/Download_PDFS/Ford%20Dab%20Radio%20Cd%20Navigation%20System.pdf

Table of Contents 2015 Polaris Sportsman 500 Service Manual

1. Understanding the eBook 2015 Polaris Sportsman 500 Service Manual
    - The Rise of Digital Reading 2015 Polaris Sportsman 500 Service Manual
    - Advantages of eBooks Over Traditional Books
2. Identifying 2015 Polaris Sportsman 500 Service Manual
    - Exploring Different Genres
    - Considering Fiction vs. Non-Fiction
    - Determining Your Reading Goals
3. Choosing the Right eBook Platform
    - Popular eBook Platforms
    - Features to Look for in an 2015 Polaris Sportsman 500 Service Manual
    - User-Friendly Interface
4. Exploring eBook Recommendations from 2015 Polaris Sportsman 500 Service Manual
    - Personalized Recommendations
    - 2015 Polaris Sportsman 500 Service Manual User Reviews and Ratings
    - 2015 Polaris Sportsman 500 Service Manual and Bestseller Lists
5. Accessing 2015 Polaris Sportsman 500 Service Manual Free and Paid eBooks
    - 2015 Polaris Sportsman 500 Service Manual Public Domain eBooks
    - 2015 Polaris Sportsman 500 Service Manual eBook Subscription Services
    - 2015 Polaris Sportsman 500 Service Manual Budget-Friendly Options

6. Navigating 2015 Polaris Sportsman 500 Service Manual eBook Formats
    - ePub, PDF, MOBI, and More
    - 2015 Polaris Sportsman 500 Service Manual Compatibility with Devices
    - 2015 Polaris Sportsman 500 Service Manual Enhanced eBook Features
7. Enhancing Your Reading Experience
    - Adjustable Fonts and Text Sizes of 2015 Polaris Sportsman 500 Service Manual
    - Highlighting and Note-Taking 2015 Polaris Sportsman 500 Service Manual
    - Interactive Elements 2015 Polaris Sportsman 500 Service Manual
8. Staying Engaged with 2015 Polaris Sportsman 500 Service Manual
    - Joining Online Reading Communities
    - Participating in Virtual Book Clubs
    - Following Authors and Publishers 2015 Polaris Sportsman 500 Service Manual
9. Balancing eBooks and Physical Books 2015 Polaris Sportsman 500 Service Manual
    - Benefits of a Digital Library
    - Creating a Diverse Reading Collection 2015 Polaris Sportsman 500 Service Manual
10. Overcoming Reading Challenges
    - Dealing with Digital Eye Strain
    - Minimizing Distractions
    - Managing Screen Time
11. Cultivating a Reading Routine 2015 Polaris Sportsman 500 Service Manual
    - Setting Reading Goals 2015 Polaris Sportsman 500 Service Manual
    - Carving Out Dedicated Reading Time
12. Sourcing Reliable Information of 2015 Polaris Sportsman 500 Service Manual
    - Fact-Checking eBook Content of 2015 Polaris Sportsman 500 Service Manual
    - Distinguishing Credible Sources
13. Promoting Lifelong Learning
    - Utilizing eBooks for Skill Development
    - Exploring Educational eBooks
14. Embracing eBook Trends
    - Integration of Multimedia Elements

- Interactive and Gamified eBooks

2015 Polaris Sportsman 500 Service Manual Introduction

In this digital age, the convenience of accessing information at our fingertips has become a necessity. Whether its research papers, eBooks, or user manuals, PDF files have become the preferred format for sharing and reading documents. However, the cost associated with purchasing PDF files can sometimes be a barrier for many individuals and organizations. Thankfully, there are numerous websites and platforms that allow users to download free PDF files legally. In this article, we will explore some of the best platforms to download free PDFs. One of the most popular platforms to download free PDF files is Project Gutenberg. This online library offers over 60,000 free eBooks that are in the public domain. From classic literature to historical documents, Project Gutenberg provides a wide range of PDF files that can be downloaded and enjoyed on various devices. The website is user-friendly and allows users to search for specific titles or browse through different categories. Another reliable platform for downloading 2015 Polaris Sportsman 500 Service Manual free PDF files is Open Library. With its vast collection of over 1 million eBooks, Open Library has something for every reader. The website offers a seamless experience by providing options to borrow or download PDF files. Users simply need to create a free account to access this treasure trove of knowledge. Open Library also allows users to contribute by uploading and sharing their own PDF files, making it a collaborative platform for book enthusiasts. For those interested in academic resources, there are websites dedicated to providing free PDFs of research papers and scientific articles. One such website is Academia.edu, which allows researchers and scholars to share their work with a global audience. Users can download PDF files of research papers, theses, and dissertations covering a wide range of subjects. Academia.edu also provides a platform for discussions and networking within the academic community. When it comes to downloading 2015 Polaris Sportsman 500 Service Manual free PDF files of magazines, brochures, and catalogs, Issuu is a popular choice. This digital publishing platform hosts a vast collection of publications from around the world. Users can search for specific titles or explore various categories and genres. Issuu offers a seamless reading experience with its user-friendly interface and allows users to download PDF files for offline reading. Apart from dedicated platforms, search engines also play a crucial role in finding free PDF files. Google, for instance, has an advanced search feature that allows users to filter results by file type. By specifying the file type as "PDF," users can find websites that offer free PDF downloads on a specific topic. While downloading 2015 Polaris Sportsman 500 Service Manual free PDF files is convenient, its important to note that copyright laws must be respected. Always ensure that the PDF files you download are legally available for free. Many authors and publishers voluntarily provide free PDF versions of their work, but its essential to be cautious and verify the authenticity of the source before downloading 2015 Polaris Sportsman 500 Service Manual. In conclusion, the internet offers numerous platforms and websites that allow users to

download free PDF files legally. Whether its classic literature, research papers, or magazines, there is something for everyone. The platforms mentioned in this article, such as Project Gutenberg, Open Library, Academia.edu, and Issuu, provide access to a vast collection of PDF files. However, users should always be cautious and verify the legality of the source before downloading 2015 Polaris Sportsman 500 Service Manual any PDF files. With these platforms, the world of PDF downloads is just a click away.

FAQs About 2015 Polaris Sportsman 500 Service Manual Books

How do I know which eBook platform is the best for me? Finding the best eBook platform depends on your reading preferences and device compatibility. Research different platforms, read user reviews, and explore their features before making a choice. Are free eBooks of good quality? Yes, many reputable platforms offer high-quality free eBooks, including classics and public domain works. However, make sure to verify the source to ensure the eBook credibility. Can I read eBooks without an eReader? Absolutely! Most eBook platforms offer webbased readers or mobile apps that allow you to read eBooks on your computer, tablet, or smartphone. How do I avoid digital eye strain while reading eBooks? To prevent digital eye strain, take regular breaks, adjust the font size and background color, and ensure proper lighting while reading eBooks. What the advantage of interactive eBooks? Interactive eBooks incorporate multimedia elements, quizzes, and activities, enhancing the reader engagement and providing a more immersive learning experience. 2015 Polaris Sportsman 500 Service Manual is one of the best book in our library for free trial. We provide copy of 2015 Polaris Sportsman 500 Service Manual in digital format, so the resources that you find are reliable. There are also many Ebooks of related with 2015 Polaris Sportsman 500 Service Manual. Where to download 2015 Polaris Sportsman 500 Service Manual online for free? Are you looking for 2015 Polaris Sportsman 500 Service Manual PDF? This is definitely going to save you time and cash in something you should think about. If you trying to find then search around for online. Without a doubt there are numerous these available and many of them have the freedom. However without doubt you receive whatever you purchase. An alternate way to get ideas is always to check another 2015 Polaris Sportsman 500 Service Manual. This method for see exactly what may be included and adopt these ideas to your book. This site will almost certainly help you save time and effort, money and stress. If you are looking for free books then you really should consider finding to assist you try this. Several of 2015 Polaris Sportsman 500 Service Manual are for sale to free while some are payable. If you arent sure if the books you would like to download works with for usage along with your computer, it is possible to download free trials. The free guides make it easy for someone to free access online library for download books to your device. You can get free download on free trial for lots of books categories. Our library is the biggest of these that have literally hundreds of thousands of different products

categories represented. You will also see that there are specific sites catered to different product types or categories, brands or niches related with 2015 Polaris Sportsman 500 Service Manual. So depending on what exactly you are searching, you will be able to choose e books to suit your own need. Need to access completely for Campbell Biology Seventh Edition book? Access Ebook without any digging. And by having access to our ebook online or by storing it on your computer, you have convenient answers with 2015 Polaris Sportsman 500 Service Manual To get started finding 2015 Polaris Sportsman 500 Service Manual, you are right to find our website which has a comprehensive collection of books online. Our library is the biggest of these that have literally hundreds of thousands of different products represented. You will also see that there are specific sites catered to different categories or niches related with 2015 Polaris Sportsman 500 Service Manual So depending on what exactly you are searching, you will be able tochoose ebook to suit your own need. Thank you for reading 2015 Polaris Sportsman 500 Service Manual. Maybe you have knowledge that, people have search numerous times for their favorite readings like this 2015 Polaris Sportsman 500 Service Manual, but end up in harmful downloads. Rather than reading a good book with a cup of coffee in the afternoon, instead they juggled with some harmful bugs inside their laptop. 2015 Polaris Sportsman 500 Service Manual is available in our book collection an online access to it is set as public so you can download it instantly. Our digital library spans in multiple locations, allowing you to get the most less latency time to download any of our books like this one. Merely said, 2015 Polaris Sportsman 500 Service Manual is universally compatible with any devices to read.

Find 2015 Polaris Sportsman 500 Service Manual :

~~ford dab radio cd navigation system~~
ford f 150 under hood fuse box
flvs algebra 2 answer key segment 1
fluid power engineering practice problems answer key
focus florida achieves answer key
~~friendly letter template for third grade~~
free state province mathematics september 2014 marks 50
ford fiesta 1989 1995
ford mondeo navigation manual
ford transit workshop service manual
freedownload 2015odia calender
focus florida achieves answer key grade 5

free state grade 12 2014 september life science trial
focus on grammar 3 answer key
ford 7710 manual

2015 Polaris Sportsman 500 Service Manual :

free ebooks project gutenberg - Jan 28 2022
web the project gutenberg ebook of marie ou l esclavage aux etats unis by gustave de beaumont this ebook is for the use of anyone anywhere at no cost and with almost no restrictions w
marie ou l esclavage aux etats unis tableau de moeurs - Jul 02 2022
web nov 21 2012 critiques citations extraits de marie ou l esclavage aux etats unis tableau de moe de gustave de beaumont mais quand arrive la vague orageuse des passions du jeune âge que va
marie ou l esclavage aux États unis tableau de moeurs - Jun 13 2023
web marie ou l esclavage aux États unis tableau de moeurs américaines volume 1 marie ou l esclavage aux États unis tableau de moeurs américaines gustave de
marie ou l esclavage aux États unis tableau de moeurs - Apr 11 2023
web this data is provided as an additional tool in helping to ensure edition identification marie ou l esclavage aux tats unis tableau de moeurs am ricaines marie ou l esclavage aux tats unis tableau de moeurs am ricaines gustave de beaumont volume 2 of marie ou l esclavage aux etats unis gustave de beaumont gustave
marie ou l esclavage aux États unis tableau de moeurs - Feb 09 2023
web marie ou l esclavage aux États unis tableau de moeurs américaines worldcat org
marie ou l esclavage aux États unis tableau de mœurs - Aug 15 2023
web jul 20 2008 marie ou l esclavage aux États unis tableau de mœurs américaines gustave de beaumont free download borrow and streaming internet archive
marie ou l esclavage aux etats unis tableau de moeurs - Jul 14 2023
web mar 25 2005 beaumont gustave de 1802 1866 title marie ou l esclavage aux etats unis tableau de moeurs américaines language french loc class e300 history america revolution to the civil war 1783 1861 subject united states description and travel subject slavery united states subject united states social conditions to
marie ou l esclavage aux etats unis apple books - Feb 26 2022
web extrait les querelles religieuses qui durant le seizième siècle troublèrent l europe et firent naître les persécutions du siècle suivant ont peuplé l amérique du nord de ses premiers habitants civilisés

marie ou l esclavage aux États unis tableau de moeurs - Jan 08 2023
web marie ou l esclavage aux États unis tableau de moeurs américaines volume 2 gustave de beaumont c gosselin 1836 slaves 0 reviews reviews aren t verified but google checks for and removes fake content when it s identified
ebook marie ou l esclavage aux etats unis tableau de mo - Jun 01 2022
web marie ou l esclavage aux etats unis tableau de mo papers relating to the foreign relations of the united states jan 18 2022 revenue statistics 2001 feb 16 2022 presents a unique set of detailed and internationally comparable tax data in a common format for all oecd countries from 1965 onwards marie ou l esclavage
marie ou l esclavage aux États unis tableau de moeurs - Dec 27 2021
web marie ou l esclavage aux États unis tableau de moeurs américaines isbn 101880367x isbn 13 9781018803678 like new used free shipping in the us
gustave de beaumont marie ou l esclavage aux États unis - Apr 30 2022
web jan 16 2015 gustave de beaumont marie ou l esclavage aux États unis paris aux forges de vulcain 2014 339 pages 20 texte citation auteur texte intégral format non disponible partager par e mail 1 1835
marie ou l esclavage aux etats unis tableau de mo 2023 - Dec 07 2022
web marie ou l esclavage aux États unis tableau de moeurs américaines gustave de beaumont 1842 marie ou l esclavage aux etats unis tableau de moeurs americaines gustave de beaumont 1835 cora ou l esclavage jules barbier 2006 10 01 belle gracieuse éduquée et fêtée en france cora gérard fille d un
gustave de beaumont marie ou l esclavage aux États unis - Mar 30 2022
web pourtant marie ou l esclavage aux États unis 2014 est un texte hybride formé d un roman agrémenté de nombreuses et abondantes notes de bas de page offrant analyses historiques politiques et sociologiques suivi de trois notes particulièrement développées et doté d une postface fort éclairante de l universitaire laurence cossu beaumont spéc
marie ou l esclavage aux États unis wikisource - Mar 10 2023
web tableaux comparatifs de la population libre et de la population esclave aux États unis depuis 1790 jusqu en 1830 deuxiÈme partie note sur le mouvement religieux aux États unis troisiÈme partie note sur l état ancien et la condition présente des tribus indiennes de l amérique du nord notes sur les femmes
marie ou l esclavage aux etats unis tableau de mo - Oct 05 2022
web marie ou l esclavage aux etats unis tableau de moeurs américaines gustave de beaumont 1844 marie ou l esclavage aux États unis gustave de beaumont 1840 catalogue général des livres français italiens espagnols etc tant anciens que modernes qui se trouvent chez barthés et lowell 1857 oeuvres choisies alfred de vigny 1913
marie ou l esclavage aux États unis online library of liberty - Sep 04 2022

web marie ou l esclavage aux États unis tableau de moeurs américaines paris c gosselin 1840 4th edition copyright this is a public domain text which was first scanned to pdf by gallica the digital library of the bibliothèque national de france gallica bnf fr

gustave de beaumont marie ou l esclavage aux États unis tableau de - Nov 06 2022

web le livre au format epub à télécharger un fichier de 340 k une édition électronique réalisée à partir de l ouvrage de gustave de beaumont 1802 1866 marie ou l esclavage aux États unis tableau de mœurs américaines 1840 paris librairie de charles gosselin 1840 392 pages

esclavage aux États unis wikipédia - Aug 03 2022

web l esclavage aux États unis 1619 1865 est une institution contestée dès ses débuts lorsqu elle prend son essor dans le dernier quart du xviie siècle en colonie de virginie puis au début du siècle suivant en caroline avant de subir le choc des dizaines de milliers de libérations d esclaves par les anglais pendant la guerre d indépendance dan

marie ou l esclavage aux États unis tableau de moeurs - May 12 2023

web sep 21 2008 marie ou l esclavage aux États unis tableau de moeurs americaines gustave de beaumont free download borrow and streaming internet archive book digitized by google from the library of the university of michigan and uploaded to the internet archive by user tpb skip to main content

student solutions manual volume 1 for serway jewett s physics - Nov 15 2022

mar 4 2010 for chapters 23 46 this manual contains detailed solutions to approximately 20 of the problems per chapter indicated in the textbook with boxed problem numbers the

student solutions manual volume 2 for serway jewett s physics - Mar 07 2022

dec 9 2018 serway jewett physics for scientists and engineers with modern physics 9ed topics physics calculus for engineers collection opensource language english

physics for scientists and engineers with modern - Sep 25 2023

in the meantime you can download the document by clicking the download button above serway physics 8th edition solution manual

serway jewett physics for scientists and engineers with - Jan 05 2022

apr 30 2018 may 28 2015 serway and jewett 9th edition solution manual pdf download here 1 2 serway physics solutions 8th edition

student solutions manual volume 2 for serway jewett s physics - Aug 12 2022

find step by step solutions and answers to student solutions manual volume 2 for serway jewett s physics for scientists and engineers 9781439048528 as well as

student solutions manual volume 1 for serway jewett s physics - Feb 06 2022
instructor s solutions manual for serway and jewett s physics for scientists and engineers sixth edition pdf instructor s solutions manual for serway and jewett s
physics for scientists and engineers 8th edition textbook solutions - Apr 20 2023
student solutions manual and study guide for serway and jewett s physics for science and engineers 8th edition
student solutions manual volume 1 for serway jewett s physics - Jan 17 2023
access student solutions manual volume 1 for serway jewett s physics for scientists and engineers 8th edition solutions now our solutions are written by chegg experts so you
student solutions manual volume 2 for serway jewett s - Sep 13 2022
text phys for scientists engineers pse 8e serway jewett 1 4390 4854 1 student solutions manual vol 1 phys 101 cb com 84 edition 8th kaynak
physics 2 serway jewett manual solution 8th vdocuments mx - Nov 03 2021

student solutions manual with study guide for serway jewett s - Apr 08 2022
oct 21 2009 student solutions manual volume 1 for serway jewett s physics for scientists and engineers 8th 8th edition by raymond a serway author john w jewett author 4 1
student solutions manual volume 1 for serway jewett s physics - Oct 14 2022
student solutions manual volume 2 for serway jewett s physics for scientists and engineers 8th serway raymond a jewett john w 9781439048528 abebooks
instructor s solutions manual for serway and - Dec 04 2021

student solutions manual volume 2 for serway jewett s - May 09 2022
volume 2 of student solutions manual and study guide for serway and jewett s physics for science and engineers 8th edition raymond a serway authors john r gordon john w
student solutions manual volume 1 for serway - Mar 19 2023
find step by step solutions and answers to student solutions manual volume 1 for serway jewett s physics 9781133008033 as well as thousands of textbooks so you can
8th edition by serway solutions manual pdfsayar com - Jul 11 2022
mar 4 2010 this listing is for student solutions manual volume 2 for serway jewett s physics for scientists and engineers 8th this edition is very similar to isbn 1285071697

student solutions manual and study guide for serway and - Feb 18 2023
mar 4 2010 student solutions manual volume 2 for serway jewett s physics for scientists and engineers 8th 8th edition by raymond a serway author john w jewett author
student solutions manual volume 1 for serway jewett s physics - Jun 22 2023
step by step video answers explanations by expert educators for all physics for scientists and engineers with modern physics 8th by raymond a serway john w jewett jr only on
student solutions manual volume 2 for serway jewett s - Dec 16 2022
student solutions manual volume 1 for serway jewett s physics for scientists and engineers 8th edition magazine with 418 pages from guram de read more about cengage
serway physics 8th edition solution manual academia edu - Aug 24 2023
student solutions manual volume 1 for serway jewett s physics for scientists and engineers 8th edition 13 752 8 548 12mb read more physics for scientists and engineers student
solutions for physics for scientists and engineers with modern - May 21 2023
solutions manuals are available for thousands of the most popular college and high school textbooks in subjects such as math science physics chemistry biology engineering mechanical electrical civil business and more understanding physics for scientists and engineers 8th edition homework has never been easier than with chegg study
physics for scientists and engineers solution manual - Jul 23 2023
preface this student solutions manual and study guide has been written to accompany the textbook physics for scientists and engineers eighth edition by raymond a serway and
student solutions manual volume 2 for serway jewett s physics - Jun 10 2022
may 18 2012 raymond a serway john w jewett cengage learning may 18 2012 education 656 pages this two volume manual features detailed solutions to 20 percent of
dragon ball cultura volumen 1 origen by padula derek - Feb 02 2023
web buy dragon ball cultura volumen 1 origen by padula derek online on amazon ae at best prices fast and free shipping free returns cash on delivery available on eligible purchase
dragon ball cultura volumen 1 origen google books - Aug 08 2023
web mar 30 2018 emprenderás una aventura con son goku desde el capítulo 1 al 194 de la obra original explorando cada página viñeta y línea revelando la simbología oculta y el significado más profundo en el
dragon ball cultura volumen 1 origen 1 spanish edition - Jun 25 2022
web dragon ball cultura volumen 1 origen 1 spanish edition by padula derek isbn 10 1943149429 isbn 13 9781943149421

derek padula 2018 hardcover

dragon ball cultura volumen 1 origen google books - Jul 07 2023

web emprenderás una aventura con son goku desde el capítulo 1 al 194 de la obra original explorando cada página viñeta y línea revelando la simbología oculta y el significado más profundo en el

dragon ball culture volume 1 origin google books - May 05 2023

web dec 21 2014 in volume 1 you will discover the origin of dragon ball how does akira toriyama get his big break and become a manga author why does he make dragon ball where does dragon ball s

dragon ball cultura volumen 1 origen pasta blanda - May 25 2022

web derek padula es el autor de the dao of dragon ball el primer libro enrevelar la profunda historia filosofía y raíces culturales del manganime número 1 del mundo derek ha sido fan de dragon ball desde 1997 cuando vio por primera vez el anime

dragon ball cultura volumen 1 origen scribd - Jul 27 2022

web en el volumen 1 te adentrarás en la mente de akira toriyama y descubrirás el origen de dragon ball cómo consigue toriyama su gran oportunidad y se convierte en autor manga por qué crea dragon ball de dónde viene la cultura de la serie por qué tiene tanto éxito durante el camino adquirirás información inspiración y te divertirás

dragon ball cultura volumen 1 origen worldcat org - Apr 04 2023

web volumen 1 origen author derek padula author ebook spanish 2018 edition view all formats and editions publisher derek padula place of publication not identified 2018

dragon ball cultura origen volume 1 padula derek - Oct 10 2023

web dragon ball cultura origen volume 1 padula derek amazon com tr Çerez tercihlerinizi seçin alışveriş deneyiminizi geliştirmek hizmetlerimizi sunmak müşterilerin hizmetlerimizi nasıl kullandığını anlayarak iyileştirmeler yapabilmek ve tanıtımları gösterebilmek için çerezler ve benzeri araçları kullanmaktayız

dragon ball cultura volumen 1 origen by derek padula alibris - Sep 28 2022

web buy dragon ball cultura volumen 1 origen by derek padula online at alibris we have new and used copies available in 2 editions starting at 14 74 shop now

dragon ball cultura volumen 1 origen barnes noble - Oct 30 2022

web sep 28 2018 derek padula es el autor de the dao of dragon ball el primer libro y página web en revelar la profunda historia filosofía y raíces culturales del manganime número 1 del mundo la primera vez que derek vió el anime de dragon ball fue en 1997

dragon ball cultura origen google play - Jun 06 2023

web arrow forward edición en español de dragon ball culture contempla dragon ball con nuevos ojos este libro se erige como tu guía cultural de dragon ball la serie manga y anime más

dragon ball cultura volumen 1 origen 1 spanish edition - Feb 19 2022

web sep 28 2018 amazon com dragon ball cultura volumen 1 origen 1 spanish edition 9781943149421 padula derek books

dragon ball cultura volumen 1 origen ciltli kapak amazon com tr - Sep 09 2023

web dragon ball cultura volumen 1 origen padula derek amazon com tr kitap ana içeriğe atla com tr merhaba teslimat adresini seçin kitaplar merhaba giriş yapın hesap ve listeler değil misiniz Çıkış yap İadeler ve siparişler alışveriş

dragon ball cultura volumen 1 origen spanish edition - Apr 23 2022

web mar 30 2018 derek padula es el autor de the dao of dragon ball el primer libro y página web en revelar la profunda historia filosofía y raíces culturales del manganime número 1 del mundo la primera vez que derek vió el anime de dragon ball fue en 1997

dragon ball culture volume 1 origin amazon com - Nov 30 2022

web oct 21 2015 over 12 years in development dragon ball culture is a 7 volume analysis of your favorite series you will go on an adventure with son goku from chapter 1 to 194 of the original dragon ball as we explore every page panel and sentence to reveal its hidden symbolism and deeper meaning in volume 1 you will enter the mind of akira toriyama

dragon ball culture volume 1 origin by derek padula scribd - Mar 03 2023

web see dragon ball with new eyes this book is your cultural tour guide of dragon ball the world s most recognized anime and manga series over 11 years in development at over 2 000 pages and featuring over 1 800 unique terms dragon ball culture is a 7 volume analysis of your favorite series you will go on an adventure with son goku from

dragon ball cultura volumen 1 origen versión kindle amazon es - Jan 01 2023

web en el volumen 1 te adentrarás en la mente de akira toriyama y descubrirás el origen de dragon ball cómo consigue toriyama su gran oportunidad y se convierte en autor manga por qué crea dragon ball de dónde viene la cultura de la serie por qué tiene tanto éxito durante el camino adquirirás información inspiración y te

dragon ball cultura volumen 1 overdrive - Mar 23 2022

web mar 30 2018 emprenderás una aventura con son goku desde el capítulo 1 al 194 de la obra original explorando cada página viñeta y línea revelando la simbología oculta y el significado más profundo en el volumen 1 te adentrarás en la mente de akira toriyama y descubrirás el origen de dragon ball

dragon ball cultura volumen 1 origen spanish edition - Aug 28 2022

web en el volumen 1 te adentrarás en la mente de akira toriyama y descubrirás el origen de dragon ball cómo consigue toriyama su gran oportunidad y se convierte en autor manga por qué crea dragon ball de dónde viene la cultura de la serie

por qué tiene tanto éxito durante el camino adquirirás información inspiración y te